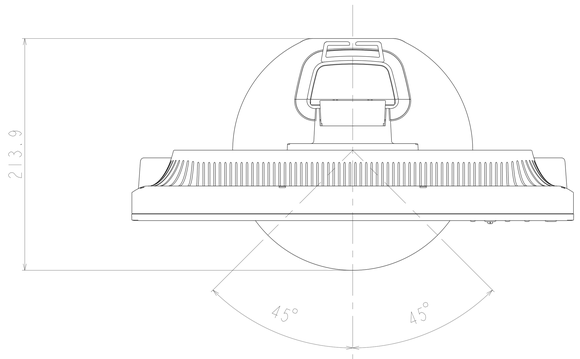

- Cabinet Color
  - White Model
    - Front Bezel : Silver2
    - Back Cover : Pure White
  - Black Model
    - Front Bezel : Pure Black
    - Back Cover : Pure Black
- Tilt angle
  - Up : 20 degrees
  - Down : -5 degrees
- Swivel angle
  - Left : 45 degrees
  - Right : 45 degrees
- Height Adjust : 110 mm
- Weight
  - With Stand : 5.5 kg
  - Without Stand : 3.5 kg

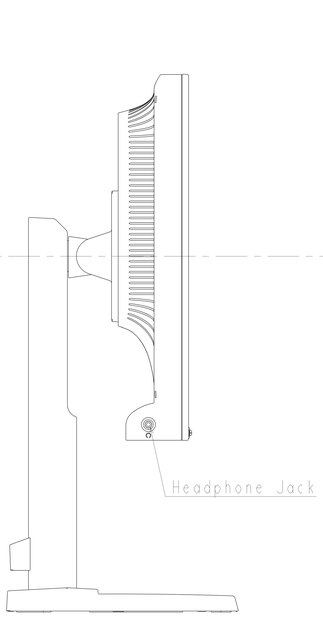

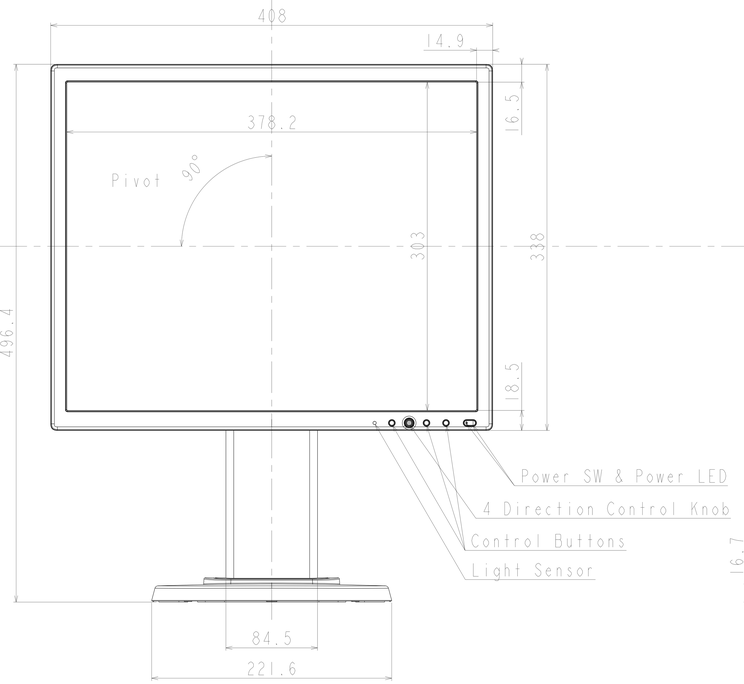

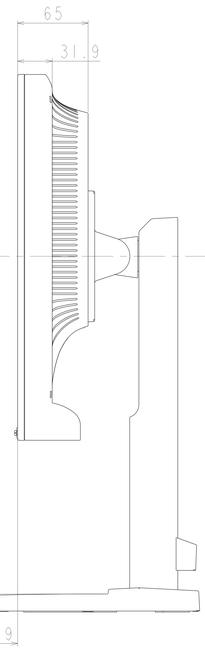

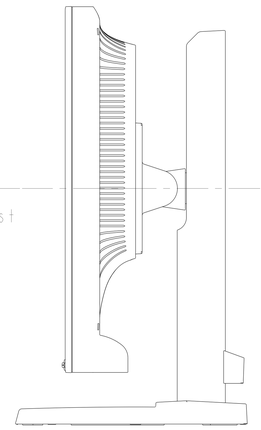

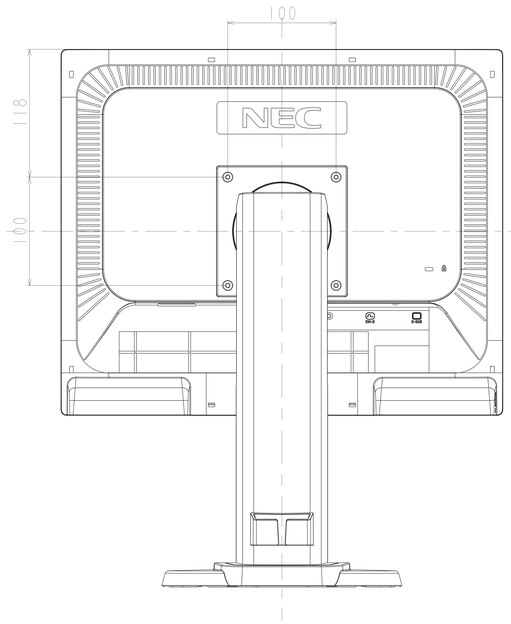

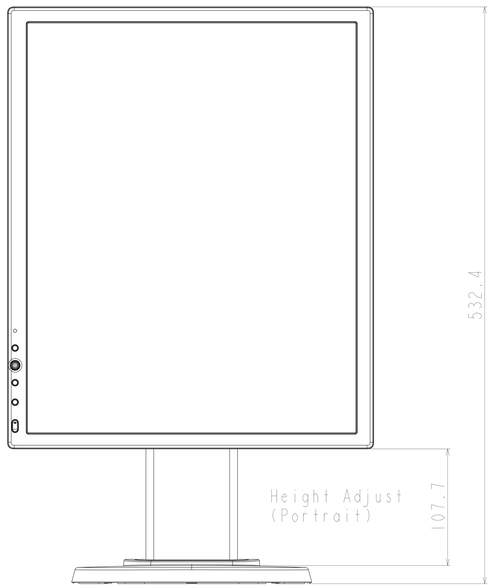

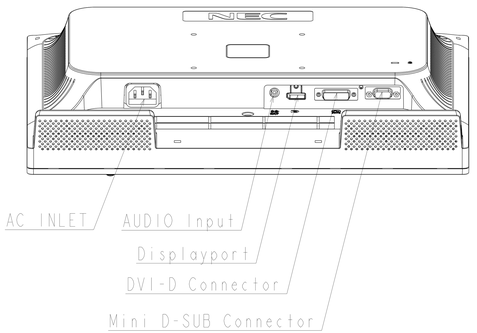

EA192M Outline Drawing